DATASHEET

6 PIN DIP PHOTOTRANSISTOR PHOTOCOUPLER
CNY17-X Series
CNY17F-X Series

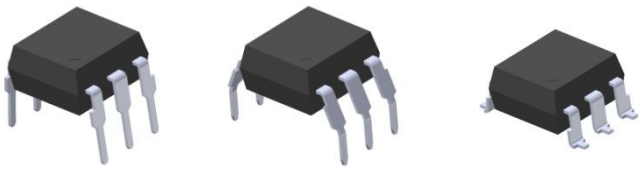

Schematic

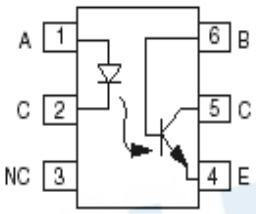

CNY17-X

Pin Configuration
1. Anode
2. Cathode
3. No Connection
4. Emitter
5. Collector
6. Base

Schematic

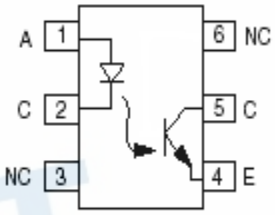

CNY17F-X

Pin Configuration
1. Anode
2. Cathode
3. No Connection
4. Emitter
5. Collector
6. No Connection

Features:

- Current transfer ratios in selected narrow range groups
  CNY17-1, CNY17F-1: 40-80%
  CNY17-2, CNY17F-2: 63-125%
  CNY17-3, CNY17F-3: 100-200%
  CNY17-4, CNY17F-4:160-320%
- High isolation voltage between input and output (Viso = 5000 Vrms)
- Creepage distance > 7.6 mm
- Operating temperature up to +110°C
- The CNY17F-X series offers no external base connection for minimum noise susceptibility
- Compact dual-in-line package
- The product itself will remain within RoHS compliant version
- Compliance with EU REACH
- UL and cUL approved(No. E214129)
- VDE approved (No. 132249)
- SEMKO approved
- NEMKO approved
- DEMKO approved
- FIMKO approved
- CQC approved

Description

The CNY17-X and CNY17F-X series of devices each consist of an infrared emitting diode optically coupled to a phototransistor.
They are packaged in a 6-pin DIP package and available in wide-lead spacing and SMD option.

Applications

- Power supply regulators
- Digital logic inputs
- Microprocessor inputs

Copyright © 2010, Everlight All Rights Reserved. Release Date : Aug 13 ,2018. Issue No: DPC-0000038 Rev. 11
Ver.:11 Release Date:09/06/2018 狀態:Approved(正式發行)

Absolute Maximum Ratings (Ta=25℃)

	Parameter	Symbol	Rating	Unit
Input	Forward current	I_F	60	mA
	Peak forward current (t = 10μs)	I_{FM}	1	A
	Reverse voltage	V_R	6	V
	Power dissipation (T_A = 25°C)	P_D	100	mW
	Derating factor (above 100°C)		3.8	mW/°C
Output	Collector-Emitter voltage	V_{CEO}	80	V
	Collector-Base voltage*1	V_{CBO}	80	V
	Emitter-Collector voltage	V_{ECO}	7	V
	Emitter-Base voltage	V_{EBO}	7	V
	Power dissipation (T_A = 25°C)	P_C	150	mW
	Derating factor (above 100°C)		9.0	mW/°C
Total Power Dissipation		P_{TOT}	200	mW
Isolation voltage *2		V_{ISO}	5000	V rms
Operating Temperature		T_{OPR}	-55 to 110	°C
Storage Temperature		T_{STG}	-55 to 125	°C
Soldering temperature *3		T_{SOL}	260	°C

Notes:
*1 Only for CNY17-X series.
*2 AC for 1 minute, R.H.= 40 ~ 60% R.H. In this test, pins 1, 2 & 3 are shorted together, and pins 4, 5 & 6 are shorted together.
*3 For 10 seconds.

Copyright © 2010, Everlight All Rights Reserved. Release Date : Aug 13 ,2018. Issue No: DPC-0000038 Rev. 11
Ver.:11 Release Date:09/06/2018 狀態:Approved(正式發行)

Electro-Optical Characteristics (Ta=25℃ unless specified otherwise)

Input

Parameter	Symbol	Min.	Typ.	Max.	Unit	Condition
Forward voltage	V_F	-	-	1.65	V	I_F = 60mA
Reverse current	I_R	-	-	10	μA	V_R = 6V
Input capacitance	C_{in}	-	18	-	pF	V = 0, f = 1MHz

Output

Parameter		Symbol	Min	Typ.	Max.	Unit	Condition
Collector-Base dark current	CNY17-X only	I_{CBO}	-	-	20	nA	V_{CB} = 10V, I_F = 0mA
Collector-Emitter dark current		I_{CEO}		-	50	nA	V_{CE} = 10V, IF=0mA
Collector-Emitter breakdown voltage		BV_{CEO}	80	-	-	V	I_C = 1mA, I_F = 0mA
Collector-Base breakdown voltage	CNY17-X only	BV_{CBO}	80	-	-	V	I_C = 0.1mA, I_F = 0mA
Emitter-Collector breakdown voltage		BV_{ECO}	7	-	-	V	I_E = 0.1mA, I_F = 0mA
Collector-Emitter capacitance		C_{CE}	-	8	-	pF	VCE = 0V, f =1MHz

* Typical values at T_a = 25°C

Copyright © 2010, Everlight All Rights Reserved. Release Date : Aug 13 ,2018. Issue No: DPC-0000038 Rev. 11
Ver.:11 Release Date:09/06/2018 狀態:Approved(正式發行)

Transfer Characteristics

Parameter		Symbol	Min	Typ.	Max.	Unit	Condition
Current Transfer Ratio	CNY17-1 CNY17F-1	CTR	40	-	80	%	I_F = 10mA ,V_{CE} = 5V
	CNY17-2 CNY17F-2		63	-	125		
	CNY17-3 CNY17F-3		100	-	200		
	CNY17-4 CNY17F-4		160	-	320		
Current Transfer Ratio	CNY17-1 CNY17F-1	CTR	13	-	-	%	I_F = 1mA ,V_{CE} = 5V
	CNY17-2 CNY17F-2		22	-	-		
	CNY17-3 CNY17F-3		34	-	-		
	CNY17-4 CNY17F-4		56	-	-		
Collector-Emitter saturation voltage		$V_{CE(sat)}$	-	-	0.3	V	I_F = 10mA , I_C = 2.5mA
Isolation resistance		R_{IO}	10^{11}	-	-	Ω	V_{IO} = 500Vdc
Input-output capacitance		C_{IO}	-	0.5	-	pF	V_{IO} = 0, f = 1MHz
Turn-on time		T_{on}	-	10	12	µs	V_{CC} = 10V, I_C = 2mA, R_L = 100Ω See Fig. 11
Turn-off time		T_{off}	-	9	12		
Rise time		T_r	-	6	10		
Fall time		T_f	-	8	10		
Rise time		T_r	-	2	10		V_{CC} = 5V, I_F = 10mA, R_L = 75Ω, See Fig. 11
Fall time		T_f	-	3	10		

* Typical values at T_a = 25°C

Copyright © 2010, Everlight All Rights Reserved. Release Date : Aug 13 ,2018. Issue No: DPC-0000038 Rev. 11
Ver.:11 Release Date:09/06/2018 狀態:Approved(正式發行)

Typical Electro-Optical Characteristics Curves

Figure 1. Forward Current vs Forward Voltage

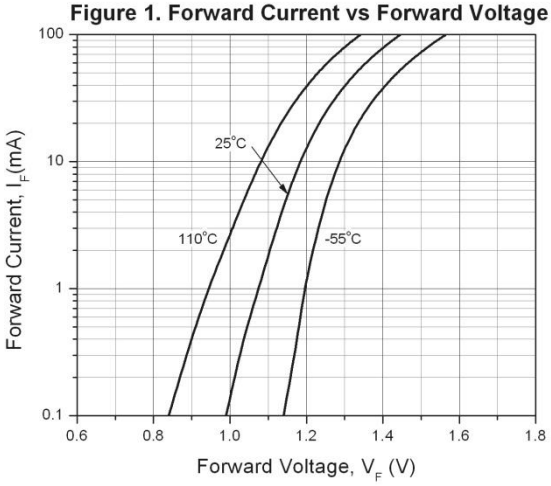

Figure 2. Current Tranfer Ratio vs Forward Current

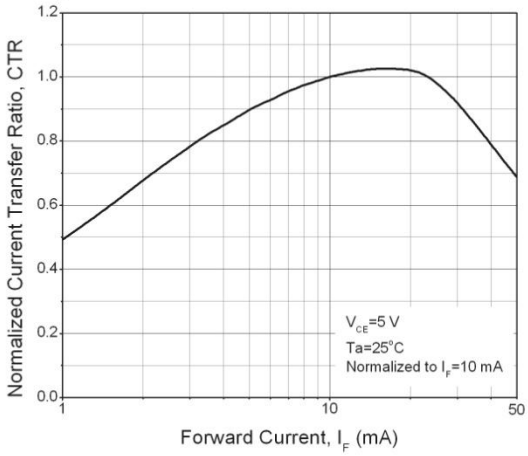

Figure 3. Current Tranfer Ratio vs Ambient Temperature

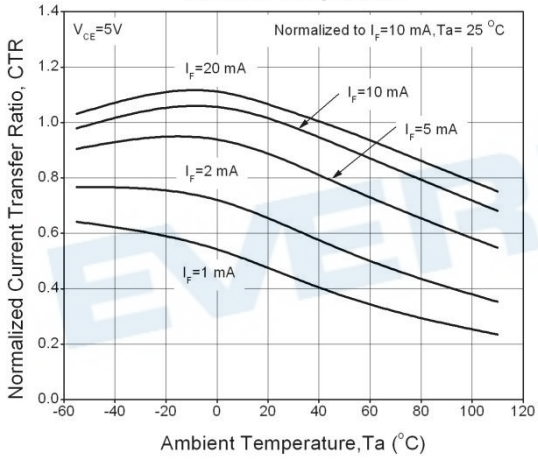

Figure 4. Current Transfer Ratio (Saturated) vs Base-Emitter Resistance

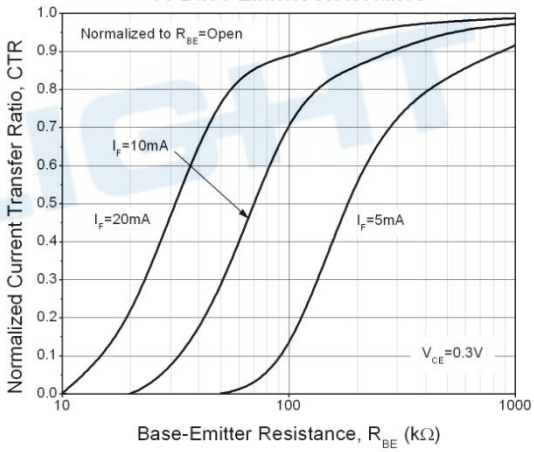

Figure 5. Current Transfer Ratio (Unsaturated) vs Base-Emitter Resistance

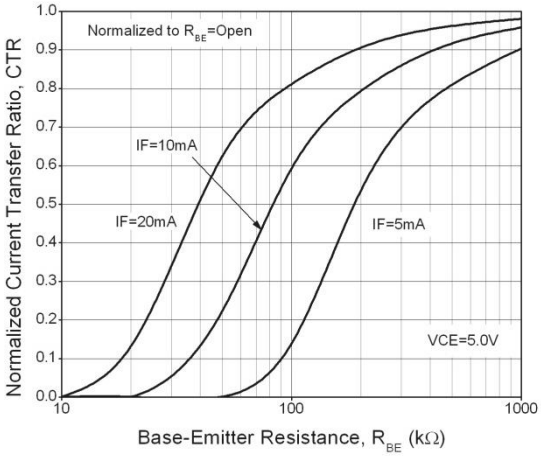

Figure 6. Dark Current vs Ambient Temperature

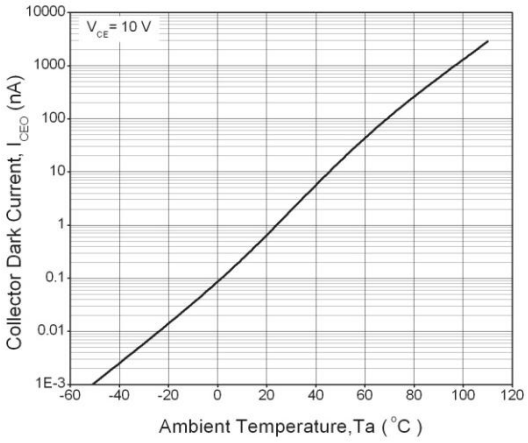

Copyright © 2010, Everlight All Rights Reserved. Release Date : Aug 13 ,2018. Issue No: DPC-0000038 Rev. 11

Ver.:11 Release Date:09/06/2018 狀態:Approved(正式發行)

Figure 7. Collector-Emitter Saturation Voltage vs Collector Current

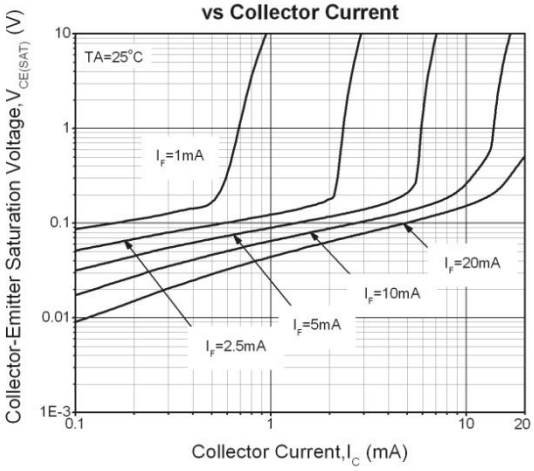

Figure 8. Switching Time vs Load Resistance

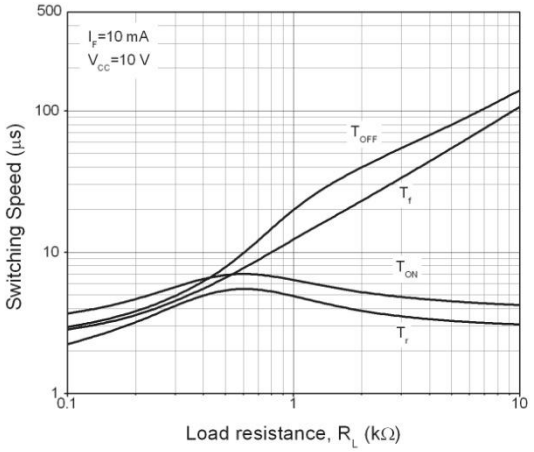

Figure 9. Turn-on Time vs Base-Emitter Resistance)

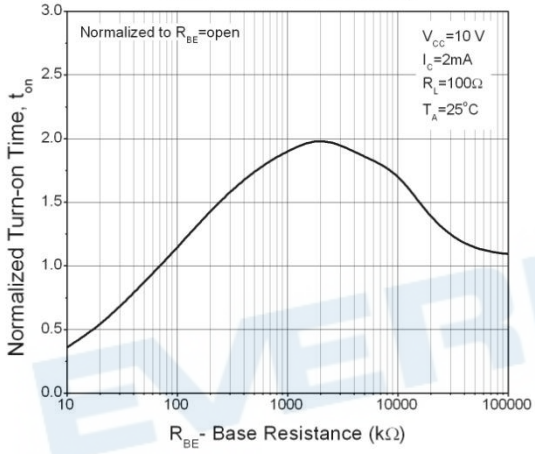

Figure 10. Turn-off Time vs Base-Emitter Resistance

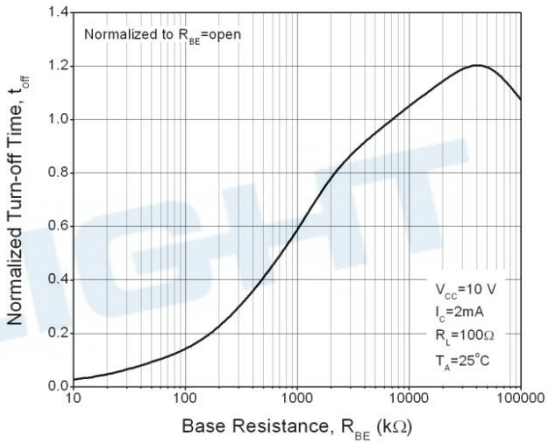

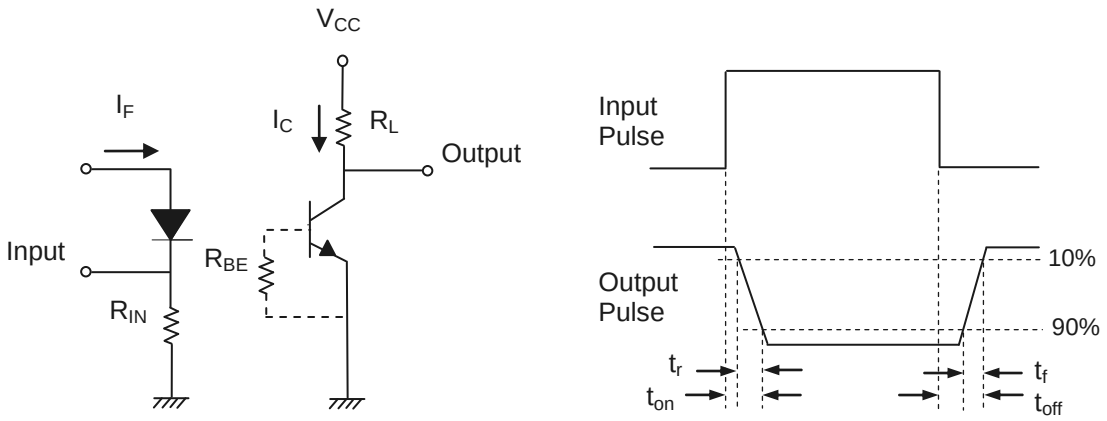

Figure 11. Switching Time Test Circuit & Waveforms

Copyright © 2010, Everlight All Rights Reserved. Release Date : Aug 13 ,2018. Issue No: DPC-0000038 Rev. 11
Ver.:11 Release Date:09/06/2018 狀態:Approved(正式發行)

Order Information

Part Number

CNY17-XY(Z)-V

or

CNY17F-XY(Z)-V

Note

X = Part no. (1, 2, 3 or 4)
Y = Lead form option (S, S1, M or none)
Z = Tape and reel option (TA, TB or none).
V = VDE (optional)

Option	Description	Packing quantity
None	Standard DIP-6	65 units per tube
M	Wide lead bend (0.4 inch spacing)	65 units per tube
S (TA)	Surface mount lead form + TA tape & reel option	1000 units per reel
S (TB)	Surface mount lead form + TB tape & reel option	1000 units per reel
S1 (TA)	Surface mount lead form (low profile) + TA tape & reel option	1000 units per reel
S1 (TB)	Surface mount lead form (low profile) + TB tape & reel option	1000 units per reel

Copyright © 2010, Everlight All Rights Reserved. Release Date : Aug 13 ,2018. Issue No: DPC-0000038 Rev. 11
Ver.:11 Release Date:09/06/2018 狀態:Approved(正式發行)

Package Dimension (Dimensions in mm)

Standard DIP Type

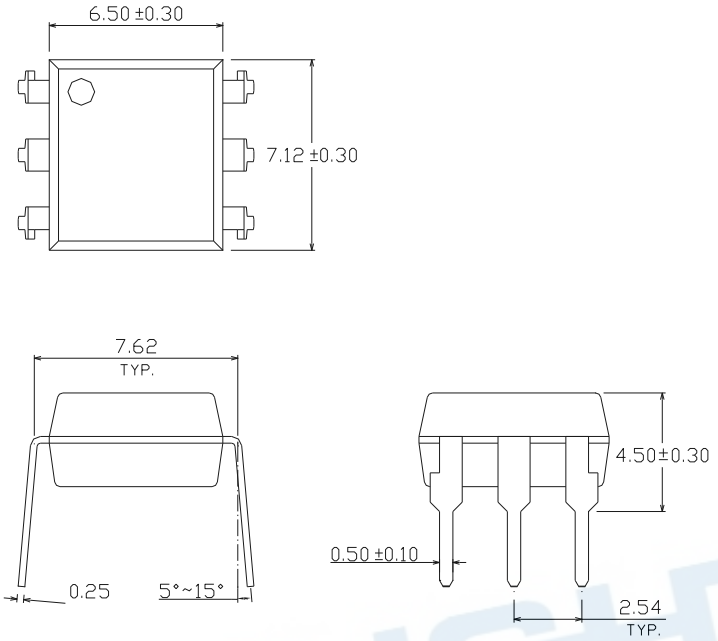

Option M Type

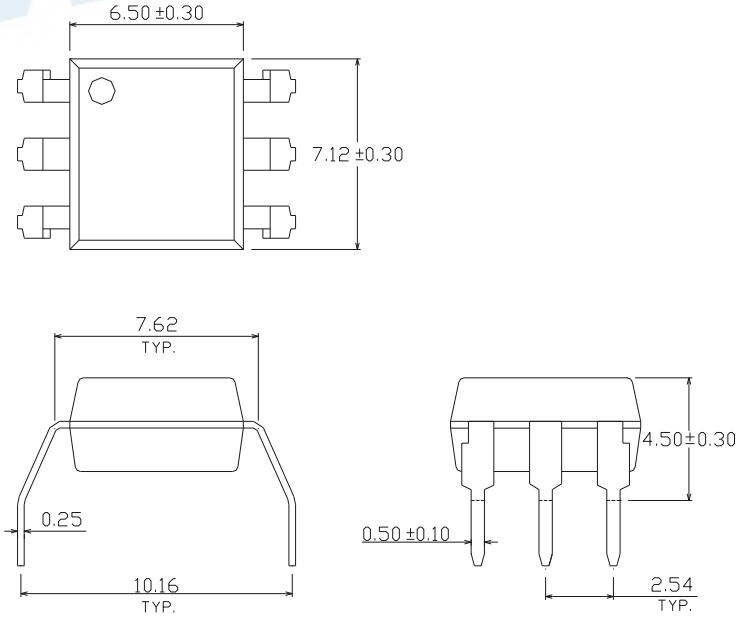

Copyright © 2010, Everlight All Rights Reserved. Release Date : Aug 13 ,2018. Issue No: DPC-0000038 Rev. 11
Ver.:11 Release Date:09/08/2018 狀態:Approved(正式發行)

Option S Type

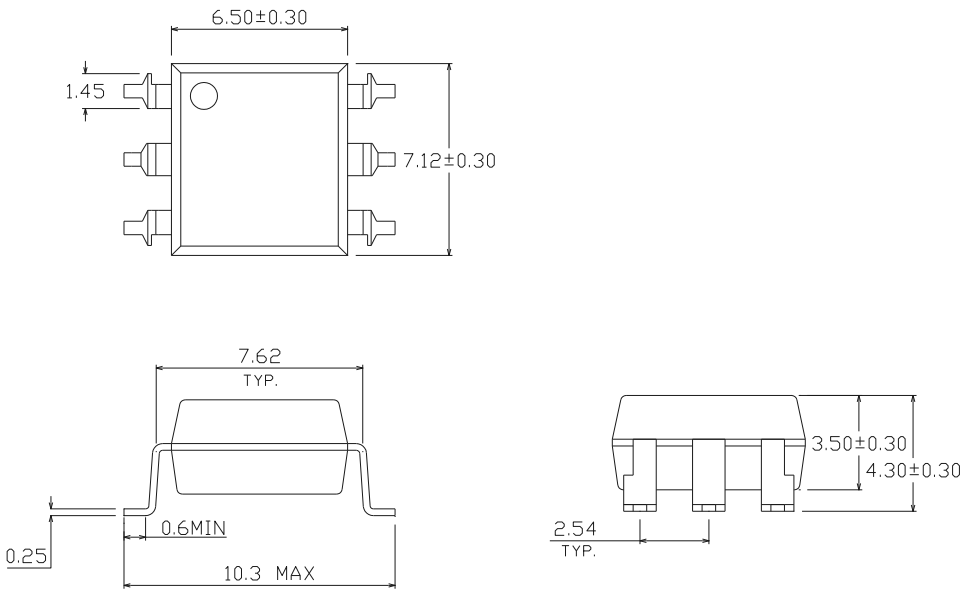

Option S1 Type

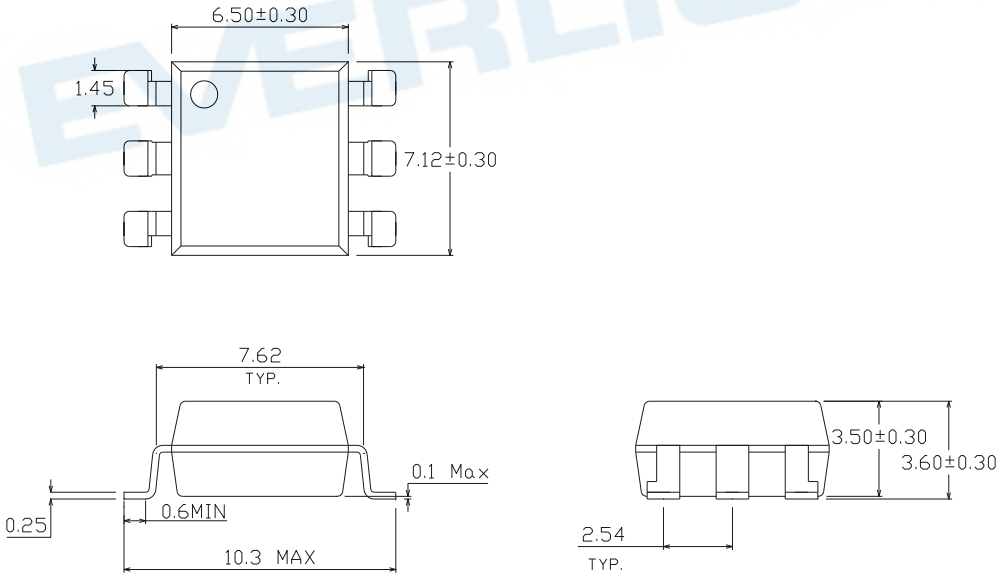

Copyright © 2010, Everlight All Rights Reserved. Release Date : Aug 13 ,2018. Issue No: DPC-0000038 Rev. 11

Ver.:11 Release Date:09/06/2018 狀態:Approved(正式發行)

Recommended pad layout for surface mount leadform

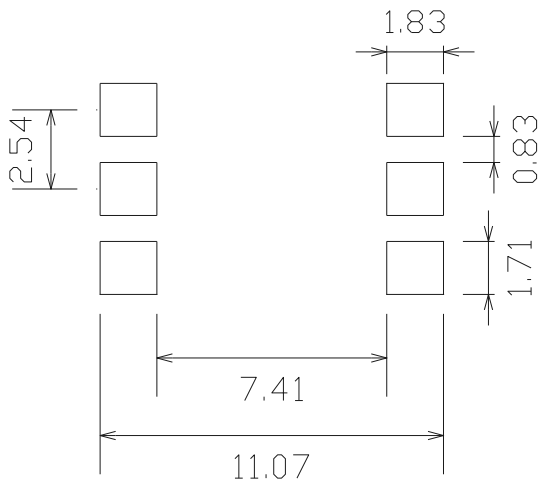

Notes

Suggested pad dimension is just for reference only.
Please modify the pad dimension based on individual need.

Device Marking

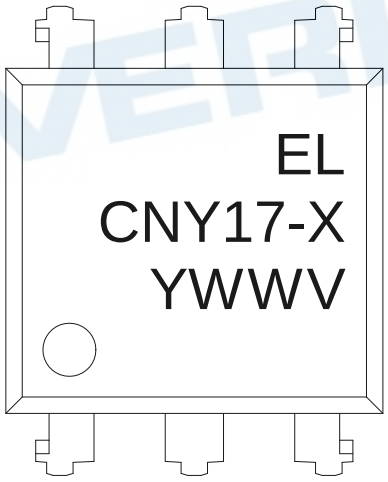

Notes

EL	denotes Everlight
CNY17-X	denotes Device Number (X: 1, 2, 3 or 4)
Y	denotes 1 digit Year code
WW	denotes 2 digit Week code
V	denotes VDE (optional)

Copyright © 2010, Everlight All Rights Reserved. Release Date : Aug 13 ,2018. Issue No: DPC-0000038 Rev. 11
Ver.:11 Release Date:09/06/2018 狀態:Approved(正式發行)

Tape & Reel Packing Specifications

Option TA

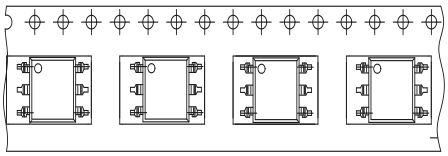

Direction of feed from reel

Option TB

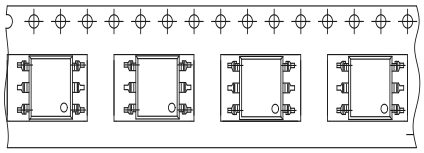

Direction of feed from reel

Tape dimensions

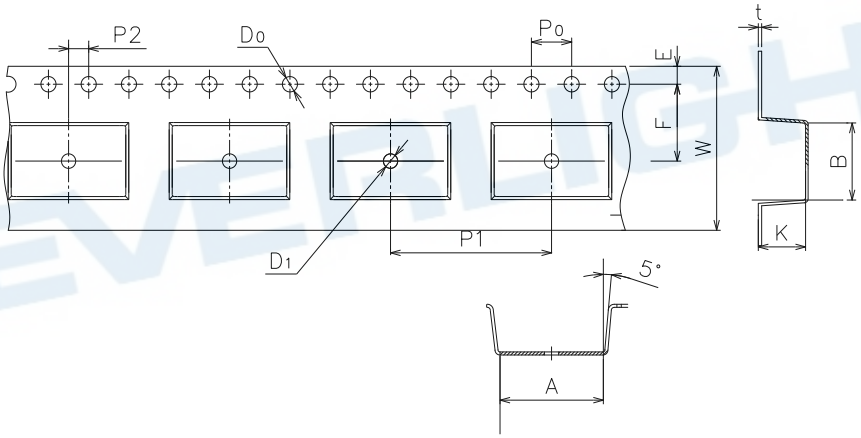

Dimension No.	A	B	Do	D1	E	F
Dimension (mm)	10.8±0.1	7.55±0.1	1.5±0.1	1.5+0.1/-0	1.75±0.1	7.5±0.1
Dimension No.	**Po**	**P1**	**P2**	**t**	**W**	**K**
Dimension (mm)	4.0±0.15	12±0.1	2.0±0.1	0.35±0.03	16.0±0.2	4.5±0.1

Copyright © 2010, Everlight All Rights Reserved. Release Date : Aug 13 ,2018. Issue No: DPC-0000038 Rev. 11
Ver.:11 Release Date:09/08/2018 狀態:Approved(正式發行)

Precautions for Use

1. Soldering Condition

1.1 (A) Maximum Body Case Temperature Profile for evaluation of Reflow Profile

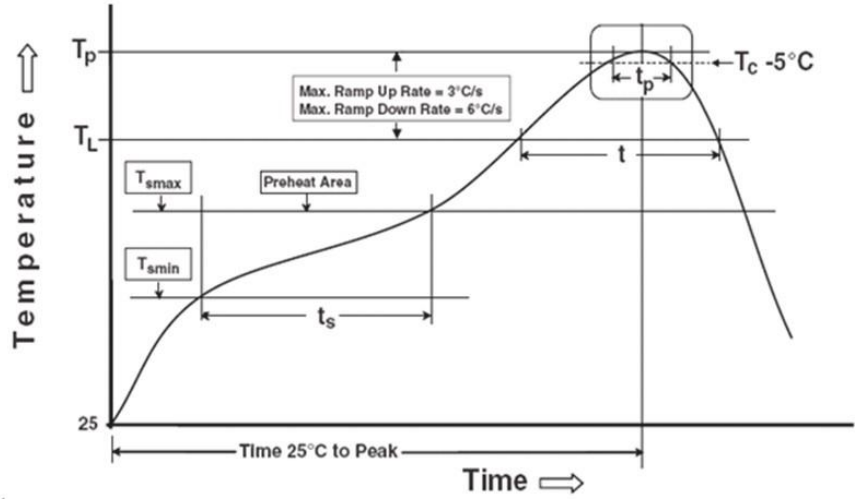

Note:	Reference: IPC/JEDEC J-STD-020D
Preheat	
Temperature min (T_{smin})	150 °C
Temperature max (T_{smax})	200°C
Time (T_{smin} to T_{smax}) (t_s)	60-120 seconds
Average ramp-up rate (T_{smax} to T_p)	3 °C/second max
Other	
Liquidus Temperature (T_L)	217 °C
Time above Liquidus Temperature (t_L)	60-100 sec
Peak Temperature (T_P)	260°C
Time within 5 °C of Actual Peak Temperature: T_P - 5°C	30 s
Ramp- Down Rate from Peak Temperature	6°C /second max.
Time 25°C to peak temperature	8 minutes max.
Reflow times	3 times

.

Copyright © 2010, Everlight All Rights Reserved. Release Date : Aug 13 ,2018. Issue No: DPC-0000038 Rev. 11

DISCLAIMER

1. Above specification may be changed without notice. EVERLIGHT will reserve authority on material change for above specification.
2. The graphs shown in this datasheet are representing typical data only and do not show guaranteed values.
3. When using this product, please observe the absolute maximum ratings and the instructions for use outlined in these specification sheets. EVERLIGHT assumes no responsibility for any damage resulting from use of the product which does not comply with the absolute maximum ratings and the instructions included in these specification sheets.
4. These specification sheets include materials protected under copyright of EVERLIGHT. Reproduction in any form is prohibited without the specific consent of EVERLIGHT.
5. This product is not intended to be used for military, aircraft, automotive, medical, life sustaining or life saving applications or any other application which can result in human injury or death. Please contact authorized Everlight sales agent for special application request.
6. Statements regarding the suitability of products for certain types of applications are based on Everlight's knowledge of typical requirements that are often placed on Everlight products in generic applications. Such statements are not binding statements about the suitability of products for a particular application. It is the customer's responsibility to

Copyright © 2010, Everlight All Rights Reserved. Release Date : Aug 13 ,2018. Issue No: DPC-0000038 Rev. 11